RESEARCH AND DEVELOPMENT OF ELECTRIC MICRO-BUS VEHICLE CHASSIS

by

Benjamin Coovert

A Thesis

Submitted to the Faculty of Purdue University

In Partial Fulfillment of the Requirements for the degree of

Master of Science in Mechanical Engineering

Department of Mechanical and Energy Engineering

Indianapolis, Indiana

December 2022

THE PURDUE UNIVERSITY GRADUATE SCHOOL
STATEMENT OF COMMITTEE APPROVAL

Dr. Andres Tovar, Chair

Department of Mechanical and Energy Engineering

Dr. Khosrow Nematollahi

Department of Mechanical and Energy Engineering

Dr. Hazim El-Mounayri

Department of Mechanical and Energy Engineering

Approved by:

Dr. Jie Chen

To looking ahead by watching our feet

ACKNOWLEDGMENTS

I would like to thank my supervisor, Dr. A. Tovar, for his help, advice, and especially patience during my time in the lab. Also, Drs. Nematollahi Khosrow and Hazim A. El-Mounayri for serving on my advisory committee and providing much-needed feedback and constructive criticism. I would also like to acknowledge the Mechanical Engineering Department at IUPUI for giving me the opportunity to further my education in such a positive environment as well as Sanket Kulkarni, Ronak Shah, Logan Sparvero, Advait Karmarkar and Haoyee Young for their contributions to this project. My thanks go out to Ken for donating the Think Car that became our first prototype and working with us in reconstructing it. I'd like to thank Mohan Mallapa for his instrumental work in getting the design off the ground and teaching me the fine detail of modeling as well as Tim Allen for his guidance in assessing the validity of our designs.

I would also like to give my thanks to Daniel Neggasi for believing in us and giving me the opportunity to focus on my research by selecting and generously supporting our project.

TABLE OF CONTENTS

LIST OF TABLES 6

LIST OF FIGURES 7

LIST OF SYMBOLS 9

ABBREVIATIONS 10

ABSTRACT 11

1 INTRODUCTION 12

1.1 Ethiopian Agriculture 12

1.2 Conceptual Solution Using Heuristic Design Methods 13

2 LITERATURE REVIEW 15

2.1 Overview 15

2.2 Conclusion 17

3 DESIGN METHODS 18

4 MODEL DESIGN USING FINITE ELEMENT ANALYSIS 26

4.1 Finite Element Analysis on Three-Wheeler Design 26

4.2 Finite Element Analysis on Four-Wheeler Design 33

4.3 Four-Wheeler Design Verification through Topology Optimization Comparison 35

4.4 ThinkCar Physical Prototype for Capacity Testing 42

4.5 Honda Conversion Method 48

5 SUMMARY 50

5.1 Research Objectives 50

REFERENCES 51

LIST OF TABLES

2.1 Electric Vehicle Sizes. 15

3.1 Element arrangement of horizontal truss. 20

3.2 Element results of stiffness calculation. 20

3.3 Nodal deflection results. 21

3.4 Nodal reaction force results. 21

3.5 Model physical engineering data. 23

LIST OF FIGURES

1.1 Food security poll in countries including Ethiopia after the pandemic.[2] 12
2.1 Concept art for three-wheeler rendered by Mohan Mallapa. 17
3.1 Horizontal truss example. 18
3.2 Design engineering data. 22
3.3 Example of good hexahedral mesh. 24
3.4 Ansys mesh metrics for model. 25
4.1 Conversion of concept render to CAD model. 27
4.2 Workflow of Ansys analysis. 28
4.3 Unacceptable stress values on drive axle and solution. 28
4.4 Post support design validation analysis for axle. 29
4.5 Unacceptable stress values on steering column mount and solution. 30
4.6 Post support design validation analysis for steering mount bracket. 30
4.7 Unacceptable stress values on battery box support members and solution. 31
4.8 Post support design validation analysis for support members. 31
4.9 Unacceptable stress values from axle mounting bracket and solution. 32
4.10 Post support design validation analysis on mounting bracket. 32
4.11 Final three-wheeler design with torsional moment support. 33
4.12 Initial design after conversion to four-wheeled design. 34
4.13 Four-wheeled design with bottom support sheet. 34
4.14 Four-wheeled design with top support sheet. 34
4.15 Concept model for complete design. 35
4.16 Topology optimization work flow 36
4.17 Stiffness considerations for topology optimization. 37
4.18 Topology optimization set up values. 37
4.19 Topology Optimization Objectives. 38
4.20 Optimization region. 38
4.21 Input models for design optimization. 39
4.22 Input models for design optimization. 39

4.23 Multi-load optimization of solid model. 40
4.24 Solid multi-load close-up. 40
4.25 Shell multi-load result at low load. 41
4.26 Steel frame extension. 43
4.27 Torsional bending support structure for extension. 44
4.28 Vertical bending support structure for extension. 45
4.29 Think Extension Model. 46
4.30 Think Prototype. 46
4.31 Think Prototype. 47
4.32 Engine dimensioning for modeling. 48
4.33 Frame dimensioning for battery box modeling. 49
4.34 Starting stages of honda model. 49

LIST OF SYMBOLS

m	mass
f	frequency
k	spring constant
K	stiffness
w	angular frequency
E	young's modulus
I	sectional moment of inertia
L	length
σ	stress
ε	strain

ABBREVIATIONS

abbr	abbreviation
GDP	gross domestic product
cm	centimeter
m	meter
kg	kilogram
MPa	mega pascal
GPa	giga pascal
MPa	mega pascal
FEA	Finite element analysis
EV	Electric vehicle

ABSTRACT

In this project, a chassis concept has been developed for a small electric vehicle 'minibus'. The vehicle is intended to be used as a transport between agricultural locations in Ethiopia to cities where the products can be sold. The objective is to develop a chassis that can house several different modular structures for the purposes of transporting refrigerated goods, a mobile power grid, or people. Literature studies have been conducted on current electric vehicle markets, battery markets, chassis materials, and optimal cross-sections. The battery housings have also been analyzed from an environmental perspective to account for conditions in Ethiopia. Based on this, it was found that a four-wheeled 'minibus' design including space for approximately fourteen custom batteries is optimal. It is essential to keep in mind that this project has been carried out both on a conceptual level within the framework of a degree project as well as a production project for use in Ethiopian rural areas. This master thesis project aims to provide a solid benchmark for further development and research within the subject.

1. INTRODUCTION

1.1 Ethiopian Agriculture

Food security for Ethiopian citizenry will face great challenges in the coming decades for a variety of reasons including not only a rapidly increasing population, [1] but also agricultural issues enhanced by the recent pandemic. Figure 1.1. shows that approximately 60% of Ethiopian households lacked confidence they would be able to put food on the table consistently.

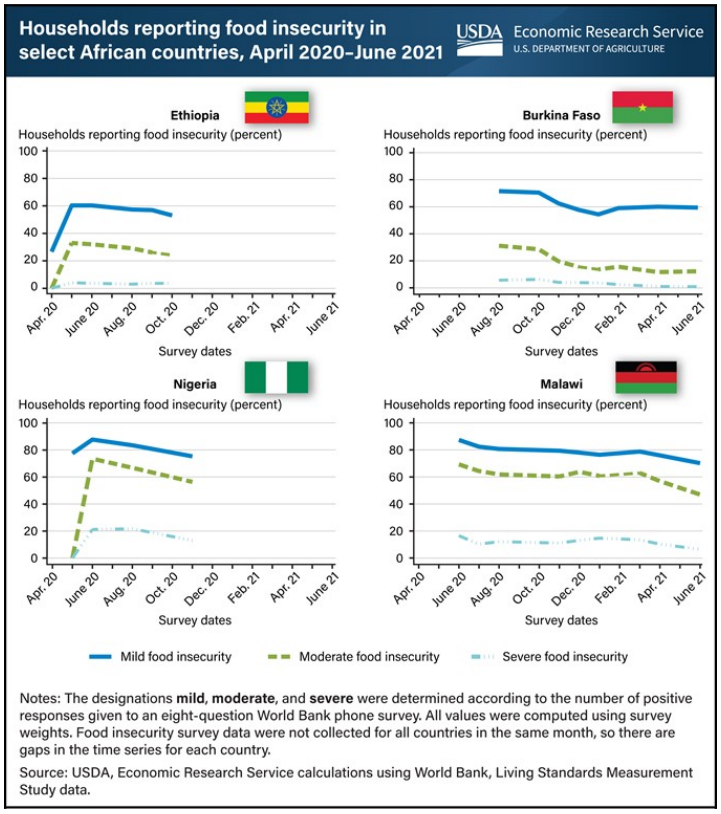

Figure 1.1. Food security poll in countries including Ethiopia after the pandemic.[2]

These problems are exacerbated by the fact that agriculture is a huge part of the Ethiopian economy, accounting for approximately 46 percent of the nation's Gross domestic Product (GDP) as of 2021.[3] Ongoing research into the causes and possible solutions has identified poor infrastructure, rapid increment of population, change of fertile farmland to

construction for the urban dwellers, climate change, decline of available natural resources, inflation of basic needs, young unemployment, political turmoil, civil conflict, and long transport times as the prevailing issues resulting in this shortage of available food in the market.[4]

Of the identified factors, only long transport times appear as one of the more surmountable challenges facing the Ethiopian agricultural community. The reasons behind the long transport times lie in both the danger of the roads, and the solutions rural farmers have taken to address them. Road conditions in Ethiopia are characterized by low maintenance, no markings, and few to no street lamps. Road travel faces hazards such as broken down vehicles and stray animals on most rural roadways, and a complete absence of any manner of emergency assistance.[5][6] These dangers lead many rural farmers use pack animals such as horses and mules to ferry crops to market and, coupled with the poor infrastructure, take a considerable time to travel and expose the crops to high rates of spoilage. [7].

This challenge was the original concept behind the project that became this thesis. Innovation of transportation technologies made available to Ethiopian farmers such that they can increase the yield of crops that successfully make it to market.

1.2 Conceptual Solution Using Heuristic Design Methods

Initial solutions were proposed focusing on the high time to market and transportation costs associated with using pack animals as transport. Canning and cooling technologies invented during the industrial revolution were the spark for improved food transportation in America using both steamboat and rail to get the goods to market. Large scale solutions such as the building of transport highways or rails would require both high investment, and maintenance that the existing roads lack, so have a low chance of being viable in Ethiopia.

Ethiopia today has something that gives them more options than the steamboats and rails of old America, roads. As noted above, [7] roads exist in rural parts of the country, but poor infrastructure and maintenance especially in the wet seasons including harvest when the rain and traffic make these roads unstable mean conventional vehicles fail to perform aptly as a transport solution. This is a substantial part of the reason pack animals are

still widely used. Vehicles were the modern answer to pack animals in developing countries around the world, but require awareness of the following design constraints to succeed.

- Inexpensive. The primary objective is to create a design that can become widely available to farmers to reduce instances of subsistence farming and increase trade. This can only be done if the design is affordable and accessible.
- Low weight and size. The road conditions in Ethiopia being characterized by obstructions and instability create conditions too hazardous to support large transport solutions such as semi trailers or large agricultural transport vehicles similar to the ones used in the US. Smaller vehicles that could service one to two families would be more likely to maneuver the unstable roads.
- Capable of refrigeration. The transportation method could only be successful if it could eliminate crop spoilage. In the US, this is achieved with refrigerated trucks, the design here required something similar.

Many small trucks exist on the market today such as the Kei truck in Japan which would satisfy many of these requirements, but are mostly gasoline vehicles. Petrol in Ethiopia is one of their top imports, and costs of gasoline are significantly high as a result to the point the government in Ethiopia waived taxes for electric vehicles.[8][9] To take advantage of these environmental factors in the area, the conceptual solution was to create an electrical vehicle with moderate range and supporting a refrigeration unit that could transport farmers and their crops to nearby cities without spoilage.

2. LITERATURE REVIEW

2.1 Overview

A solution to the ongoing transport difficulties in the rural Ethiopian climate, and the unique balance of challenges an engineering solution faces in being viable in that sphere is currently absent. To investigate the potential for innovation in this area it is crucial to gain insight into the existing electric vehicle technologies that could service the farmers of rural Ethiopia.

Electric vehicles have been around since 1832 and their popularity, tied to their practicality, has only been growing since. The three dominant markets in the EV world are China, US and Europe. In 2021, China manufactured 3.34 million electric passenger vehicles, 50% of the world industry's total.[10] These produced EV's are largely divided into the 8 size categories shown in table 2.1 [11]

Table 2.1. Electric Vehicle Sizes.

Class	Gross Vehicle Weight Rating
1	0 to 6,000
2	6,001 to 10,000
3	10,001 to 14,000
4	14,001 to 16,000
5	16,001 to 19,500
6	19,501 to 26,000
7	26,001 to 33,000
8	33,000+

Class 1 and 2 vehicles, ones that weigh from 0 to 10,000 pounds are the focus of this research as the expected load from a farmers crops is estimated at 2000 pounds based on the average farm size in Ethiopia[12] and the expected output of that farm.[13] The types of vehicle within this range, range from the mini-truck such as the Kei truck or Honda Acty, both approximately eleven feet long with a cargo capacity of 770 to 850 pounds,[14] to the minibus with a length of 25 feet and a cargo capacity of 3000 pounds.[15]

Within that scale, the type of vehicle that most closely operated with the same cargo requirements as my estimation was the microbus. The microbus is a passenger transport

vehicle that ranges from 13 to 20 feet and can carry around ten individuals or a cargo of 2000 pounds. The Waseda microbus[16] is an example of this kind of bus that could serve every required function for a tranport solution in rural Ethiopia except for handling the poor roads. It shares the same fault as electric vehicles such as the Tesla truck and Ioniq in that it lacks ground clearance. The tesla has a ground clearance of only six inches, and the Waseda a clearance of only four. In the dirt roads and hazardous terrain of rural Ethiopia, such vehicles would get stuck. This low clearance is common among electric vehicles as batteries make up a significant portion of the weight in the vehicle, so they are placed as low as possible to improve handling and reduce the vehicle's odds of rolling. Nandhakumar[17] noted in his article discussing the weight optimization of bus chassis that lowering vehicle weight can improve the performance of the vehicle, and is a sentiment shared by industry designers resulting in few off-road frame designs.

Ethiopia's own solution was to use the Isuzu truck and the Toyota Hiace, Ethiopia's most common commercial vehicles.[18] Both have similar cargo capacities that would be applicable[19] but the Toyota is a gasoline vehicle and the Isuzu truck is too expensive for the common farmer at $14,000 before taxes and tariffs on imported goods. Wholesalers in the country use Isuzu trucks to transport goods, demonstrating the ability of that size and capacity vehicle to perform the challenges this research seeks to tackle, but still lacking the capability to support refrigeration to extend spoilage time frames.[20]

This is as narrow as the gap becomes for electric vehicles in Ethiopia. The smaller vehicles have a maximum capacity of 850 pounds, and the mid-sized ones have appropriate capacity of 2000 pounds, but use vehicle chassis designed for use in urban settings with paved roads and well-maintained infrastructure. Mengesha noted this hole in the Ethiopian transportation network in 2010 by seeing the widespread use of three-wheeled electric or gasoline rickshaws called 'bajaj' locally and comparing them to the lack of any more robust transport solution that could be used in poorly maintained rural areas. [21] Abraham Abhishek noted in 2017 that the problem had still not been addressed and that bajaj remained a poor replacement for a real solution.**abhishek2017**

With the gap still existing despite feasible alternative such as the Isuzu mini truck, development of a small passenger vehicle such as a micro-bus that could both transport

produce and people while using an electric power source to improve crop transport and reduce maintenance costs became the logical fill to that technological hole. As the Isuzu chassis was designed for a gasoline engine, and the Kei truck and Waseda are too small and too large respectively, the simplest methods to creating a 'more robust bajaj' would be to increase the size of a bajaj chassis, reduce the size of a mini-bus chassis while also raising the ground clearance to account for hazardous terrain, or converting an Isuzu-type chassis from gasoline to electric. Due to high taxes on gasoline vehicles and imports,[22] the option of increasing a three-wheeler, bajaj's, capabilities was the most feasible.

2.2 Conclusion

The bajaj, or sn lún ch in some Asian countries have seen a growing popularity as a small transport cycles that use an electric rear axle and motorcycle front wheel. This made those components both inexpensive and easily available. From there a rudimentary chassis model was built to serve as the staging point of systematic improvement until the conceptual design could comply with the needs of the technological gap it would serve to fill.

Figure 2.1. Concept art for three-wheeler rendered by Mohan Mallapa.

3. DESIGN METHODS

At the end of this conceptual stage, the next stage of the project was to analyze and adjust the design so that it could transition from concept to a manufacturable prototype that could be sent for field tests in Ethiopia.

3.0.1 Design Validation via Numerical Methods

In order to assess the validity of the current design, and improve on it, it became necessary to determine a method of analyzing the strengths and faults within the model. The method to do so was to calculate the global stresses within individual members of the model and verify that those values fell within acceptable limits. A powerful tool for managing this process is the finite element method. The finite element method discretizes the solution domain from a full structure into finite, non-overlapping elements whose behaviour can be analyzed with a simple series of algebraic equations. Which give useful data such as stress, deflection and reaction forces within elements. [23, p. 21]

To give an example, consider a simple arrangement of beams affixed horizontally to a vertical wall.

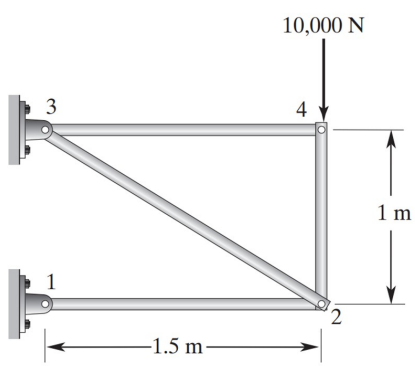

Figure 3.1. Horizontal truss example.

Members have a cross-section of $20cm^2$ and E = 70GPa. If we denote the beam from point 1 to 2 as element (1), 2 to 3 as (2), 3 to 4 as (3) and 4 to 2 as (4) we can organize the entire truss into a series of elements, nodes and angles as depicted in table 1.1. This

arrangement allows for a series of calculations on the forces and stresses within each element to return component-based stress and deflection rather than relying on complicated mathematics required to consider the truss as a whole.

Table 3.1. Element arrangement of horizontal truss.

Element	Nodes	Angle (degrees)
1	1 and 2	0
2	2 and 3	146.31
3	3 and 4	0
4	2 and 4	90

The stiffness, K, can then be determined using the following equation [23, p. 32]

$$K = A * E/l \tag{3.1}$$

where A is the cross-sectional area, E is the young's modulus, and l is the length of the element. As shown in table 1.2.

Table 3.2. Element results of stiffness calculation.

Element	Length	Stiffness (Pa/m)
1	1.5	$9.3 * 10^8$
2	1.803	$7.765 * 10^8$
3	1.5	$9.3 * 10^8$
4	1	$1.4 * 10^9$

Each of these results can be converted into a stiffness matrix $[K]$ using the formula

$$[K_1] = K[I]\{u\} \tag{3.2}$$

then used to determine reaction forces and displacements using

$$\{R\} = [K]\{u\} - \{F\} \tag{3.3}$$

or **{reaction} = [stiffness]{displacement} - {load}**.

The nodal deflection results for the truss example above become

Table 3.3. Nodal deflection results.

Node Component	Deflection
u1y	0
u1x	0
u2y	$5.446 * 10^-15$
u2x	$4.975 * 10^-15$
u3y	0
u3x	0
u4y	$7.143 * 10^-6$
u4x	0

and the reaction forces become

Table 3.4. Nodal reaction force results.

Node Component	Force
R1y	0
R1x	$-4.626 * 10^-6$
R2y	$1.400 * 10^13$
R2x	$1.794 * 10^-7$
R3y	$3.621 * 10^-7$
R3x	$4.806 * 10^-6$
R4y	$1.400 * 10^13$
R4x	0

Despite the calculations being relatively simple, the need to use matrices and do multiple calculations per element would make the finite element method impractical without the aid of software to do the rigorous calculations.[24] In this case, the software Ansys was used.

3.0.2 Ansys

The primary objective of introducing data processing through Ansys was to shift the design technique from the heuristic one employed to create the first model, into a systematic one that recognized faults, improved on them, and validated the new design to constantly create better models. For this to be possible, a few preliminary considerations had to be addressed.

Ansys is a workflow tool. This means it can be incredibly powerful at performing simple tasks a huge number of times, but propagates errors alongside results. Validating results, or care in preparing results becomes much more important. Common sources of error include faulty physical data, inappropriate element type, poor element quality, and poor definition of boundary conditions.[23, p. 69]

Physical Data

The design focus was primarily the vehicle chassis, and vehicle chassis are traditionally made of structural steel, also called mild steel. [25] So to reduce error from faulty data as much as possible, the model was stripped of unnecessary material and the engineering data verified against industry values.

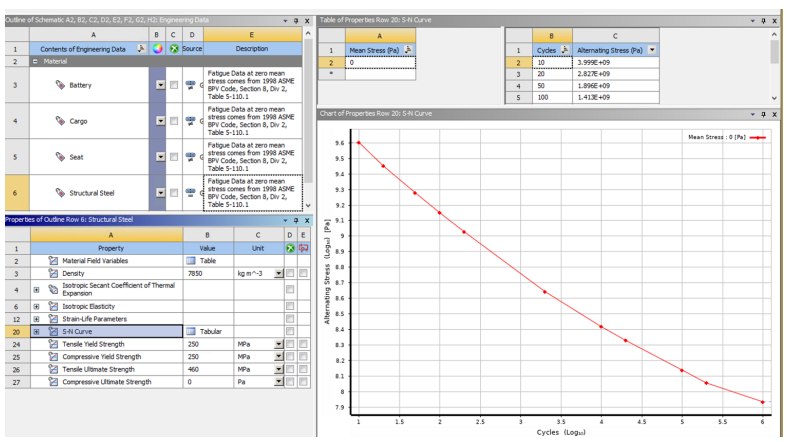

Figure 3.2. Design engineering data.

Mild steel has a youngs modulus of 200GPa, a tensile yield strength of 250MPa, a density of 7850kgm^3, and a tensile ultimate strength of 450-500MPa. [26][27]

The table in the figure above agrees with those values, reiterated more visibly in table 1.5.

Table 3.5. Model physical engineering data.

Property	Value
Density	7850 kgm^3
Tensile Yield Strength	250 Mpa
Compressive Yield Strength	250 Mpa
Tensile Ultimate Strength	460 MPa

By verifying the material properties of the mechanical assignment for the model, error in numerical approximation of element behaviour can be minimized. This is vital especially for validation work after each design iteration as awareness of the limits of the material act as design constraints used to measure the efficacy of the design. These values need to be verified so the design can develop while keeping in mind failure conditions. Steel, for example, can only withstand an amount of stress defined as the yield strength before its deformation shifts from elastic to plastic. That yield strength is generally about half of its tensile ultimate strength. Should stress analysis of the model show a value superior to this upper limit, then the model is expected to deform or fracture.

Element Type

The arrangement of non-overlapping element divisions in a model is referred to as the element mesh or simply the mesh. For most finite element analyses where a clean mesh can be successfully prepared, hexahedral elements are more suitable and generate less element noise that can affect results.[28] Conversely, tetrahedral elements are more successful at approximating solution data on curved surfaces and methods.[29] The design, as it focused primarily on finite element validation and analysis, was comprised primarily of hexahedral elements to reduce error from using other element shapes.

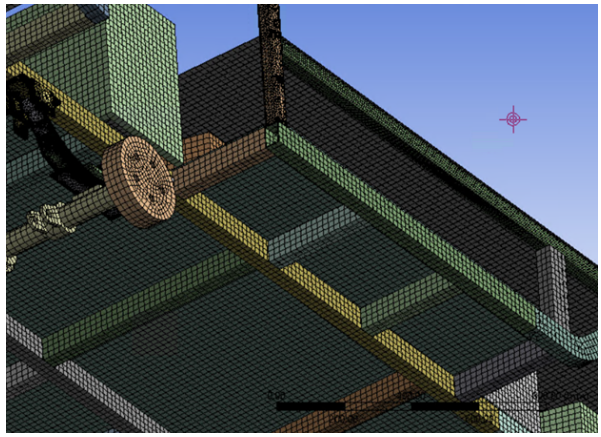

Figure 3.3. Example of good hexahedral mesh.

Element Quality

The final early piece of error circumvention come from verifying mesh quality. Ansys uses mesh metrics to analyze the quality of individual elements including a jacobian ratio, orthogonal decomposition verification labelled 'element quality', and skewness metric. The jacobian is a shorthand term referencing the ratio between jacobian matrix determinants found using a series of square matrices formed based on the shape of the elements in a mesh. This value then can be used to approximate the quality of element shapes as it is a visualization of the degree to which elements in a mesh conform to the ideal element shape.[30] As a ratio, it will always have a value between 0 and 1, and the closer it is to 1, the better the conformity. [31] The orthogonal decomposition is a procedure used to analyze large amounts of data that provides a linear basis for reducing the data to operable levels.[32] It's commonly used to produce mode shapes which describe a structure's deformation [33] and the related metric of element quality performs similarly to the jacobian in that optimal mesh quality will have a value as close to 1 as possible. [34] Skewness is a measure of the shape of an element when compared to an equilateral hypothetical element of the same volume. A good skewness value has a maximum below 0.95 and an average below 0.33. [35][31]

Mesh Metric	Jacobian Ratio (Gauss Points)
Min	0.47344
Max	0.99433
Average	0.7795
Standard Deviation	0.12132

(a) Jacobian.

Mesh Metric	Element Quality
Min	0.61433
Max	0.99985
Average	0.91547
Standard Deviation	7.262e-002

(b) Element.

Mesh Metric	Skewness
Min	2.3433e-002
Max	0.52343
Average	0.19587
Standard Deviation	0.11524

(c) Skewness.

Figure 3.4. Ansys mesh metrics for model.

3.0.3 Research Objective

The overall objective of the research is to determine a design of a vehicle chassis that can

- support the weight of a load of farm produce, measured based on the weight of a bushel of beans[36], the heaviest of Ethiopia's common crops, to be approximately 10,000N over the cargo area.
- extend the effective range of rural Ethiopian farm crops by being capable of refrigeration while also being based on electrical power.
- and be low enough cost to be affordable to manufacture and sell in Ethiopia.

These objectives will act as design constraints and allow for systematic improvement aiming towards a goal. Each are equally important as losing any one of them reduces the value of the research to negligible. Without needing to keep it affordable, for example, the design could simply become a large tractor trailer with high torque and large tires. Without the need to ferry 10k N of produce while accounting for a safety factor, the design would simply be a copy of the small electric carts popular in Asian countries. And, without the need to be based on electrical power for accessibility purposes, the design would lose out in marketability as a feasible solution when compared to simpler options like used vehicles with coolers in the back.

4. MODEL DESIGN USING FINITE ELEMENT ANALYSIS

4.1 Finite Element Analysis on Three-Wheeler Design

The process for creation and validation of the three-wheeler 'bajaj' from the concept while minimizing cost and weight while remaining capable of supporting the necessary loads was performed by primarily focusing on maximizing the stiffness of the design.[37] This is valuable as maximizing the stiffness seeks to include as much solid material in a design as possible to achieve optimum rigidity.[38] This is useful to start with a bare design then increase its stiffness until it complies with the load requirements and safety factor, determined for static load, to create a design that is the optimal version of the basic design based on material used. The benefit to this approach is its speed and guarantee to arrive at a viable design over iterations of assessment and adjustment. The limitation is the initial design. Simply assessing and improving does not create the *optimal* design, but the optimal *version* of the initial design. [39] It is important to note that optimal here does not mean the design cannot be improved, but rather that it will have reached a sort of critical point following the constraint paths of mass and rigidity.

The safety factor for this analysis was approximated using the equation for static load as a rule.

$$x_w = x_1 x_2 x_3 \tag{4.1}$$

Where x_w is the safety factor, x_1 is the design accuracy 1œ1.15, x_2 is the non-typical overload 1.1œ1.18, and x_3 is the overload factor 1.1œ1.2.[40]

As verifying that the safety factor was calculated correctly generally requires product testing,[40] the factor here was instead used as a rule of thumb to help assess the expected design performance after each analysis phase.

The first step in performing the iterative design was to convert the conceptual solution into a CAD model that was compatible with FEA methods.

(a) Render.

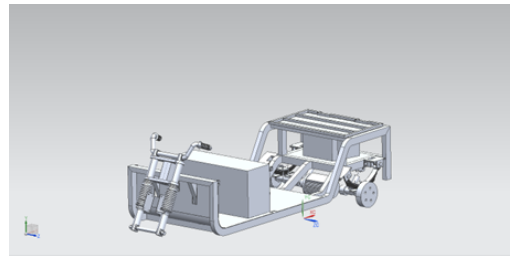

(b) Model.

Figure 4.1. Conversion of concept render to CAD model.

This design was driven by the size of the components. The rear axle and front steering assembly had both been sourced specifically with affordability in mind and hence constrained both the height and width of the chassis before design began. This limited the shape of the initial design, which increased confidence in the eventual solution as it simultaneously limited possible design variations. Another consideration for the design, were the beam elements were each chosen to be hollow square beams, which are both easy to manufacture, as the design exists to be manufactured inexpensively as a local product in Ethiopia to take advantage of the manufacturing plants there not operating at capacity,[22] but also are inexpensive to manufacture. Once the model was finished, the method to maximize the rigidity of the model was to perform structural and transient analysis on the model in Ansys and, using Ansys as a tool to do so, minimize the stress in the design to stay within acceptable bounds determined by our material properties.

4.1.1 Ansys Analysis Set-up

The Ansys analysis was performed by initiating a static structural numerical model, then transmitting the results of that model into a modal analysis, which determines the natural frequencies of the structure and vibration characteristics,[41] which is vital to vehicle analytics as vehicles are subject to vibration from both road conditions and environmental factors like wind and rain, but also from their own engine and rotating axle, drive axle and wheels.[42]

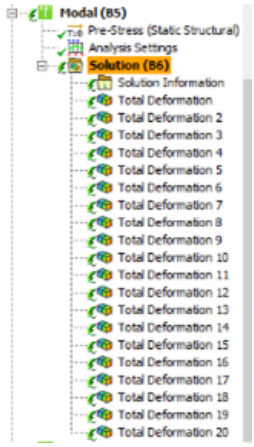

(a) Modal.

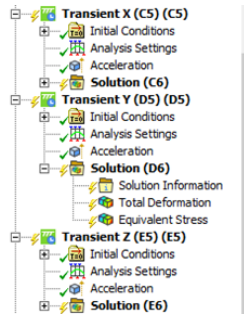

(b) Transient.

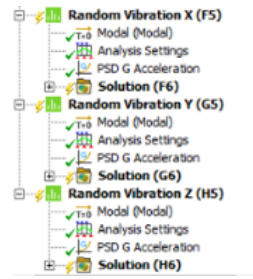

(c) Random Vibration.

Figure 4.2. Workflow of Ansys analysis.

Those results are used in transient analysis. Transient analysis is set up to apply a load over a very small time step to replicate how the structure responds to shock. This results in a triangular load curve assessed over a time step of 1.2*10−2 seconds. [43]

Finally, to approximate the stresses created by the uneven road surface 'impacting' the vehicle over the course of operation, random vibration analysis was used. This can be used to not only calculate areas of high stress during operation, but also estimate life-span of the structure based on material fatigue. [44]

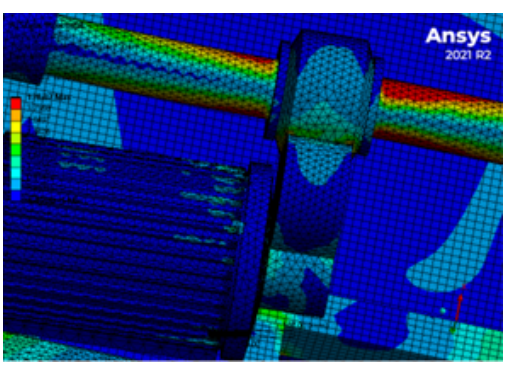

(a) Axle stress contours.

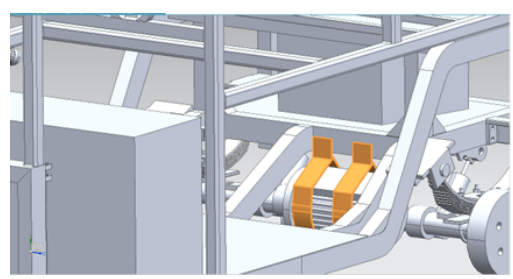

(b) Engine strap model.

Figure 4.3. Unacceptable stress values on drive axle and solution.

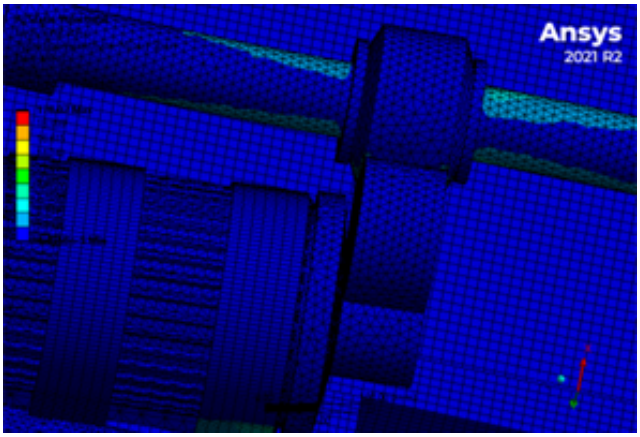

Figure 4.4. Post support design validation analysis for axle.

Each of these analysis tools were compiled into a single model and used to analyze the maximum stresses present in elements of the mesh model created for the three-wheeler. The following figures show examples of the iterative design that identified unacceptable stresses in members of the design and, after potential solutions to those unacceptable stresses were implemented, validated the new design. Figure 4.3 shows the high stress area formed in the axle from the axle lacking a motor mount as part of its kit. The proposed solution was to insert straps to support the motor during operation. Figure 4.3 shows the success of that solution in the eyes of the analysis model, which simultaneously shows one of the limitations of the analysis system. A motor mount that alleviated the cyclic moment the hanging motor applied to the axle is a very common solution in the industry to this problem. The limitation of the system shows from the fact most motor mounts are steel or aluminum harnesses that can resist both shock and *friction.*[45] Motor straps eliminate the stress as intended, but the model is insufficient to address the low life-span of the material.

One of the other considerations necessary to keep in mind while the design iterated was the lack of a cost model for the three wheeler. One of the primary objectives of the research was to create an affordable design, not simply an effective one. Figure 4.5 and 4.6 illustrate an area of high stress in the steering mount element supporting the motorcycle style front wheel. The solution to the high stress area was a simple bracing bracket which was immediately effective, but would need to be custom machined to fit in the non-typical

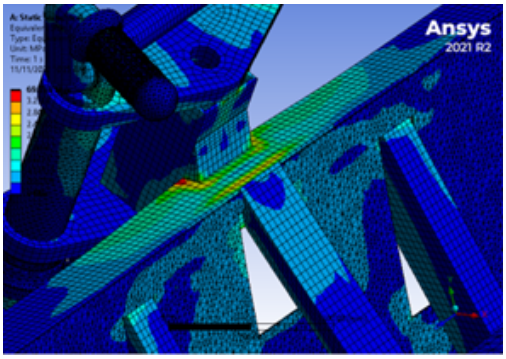

(a) Steering member stress contours.

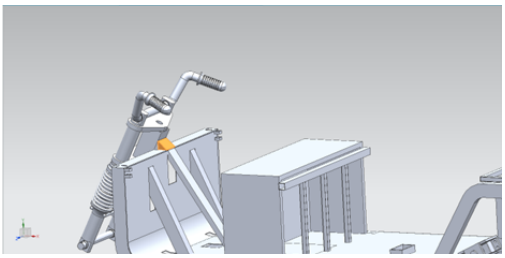

(b) Bracket model.

Figure 4.5. Unacceptable stress values on steering column mount and solution.

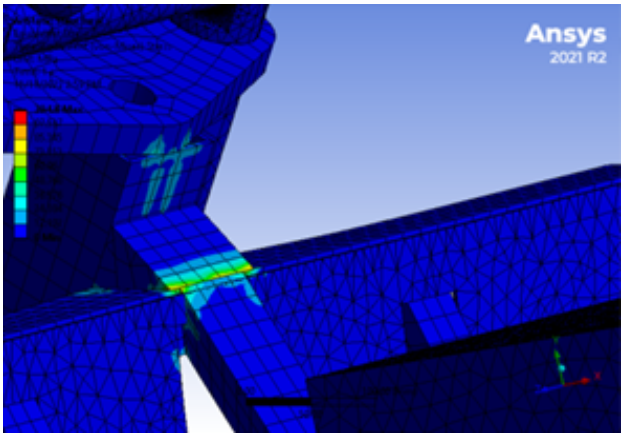

Figure 4.6. Post support design validation analysis for steering mount bracket.

area. The cost of a piece like this would not be extreme, somewhere between $20 and $50 [46] but with a maximum budget of $1500, with half of that being directed to battery costs, a more effective solution would be to extend the lower support bar all the way up to the steering mount. This serves to show the design strategy *functioned* as it still successfully created a design considering all design constraints, but wasn't necessarily optimal.

The brackets in the battery box here show the progression of that consideration. Ansys doesn't have the capability to set up a cost model for its numerical models, but research can fill that gap. Forty-five degree triangle brackets are common in industry and can be sourced inexpensively. They function with identical success to the untypical front bracket, but are more accessible.

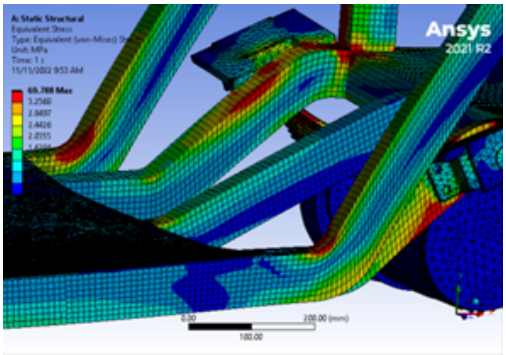

(a) Support member stress contours.

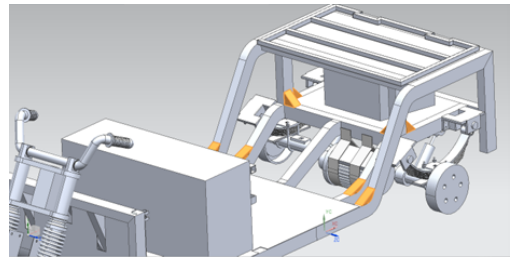

(b) Support bracket model.

Figure 4.7. Unacceptable stress values on battery box support members and solution.

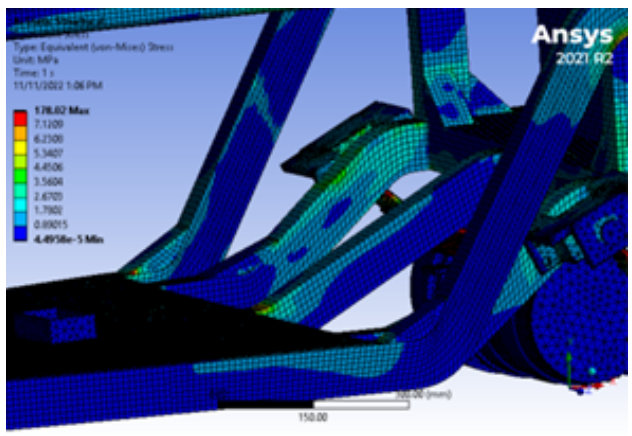

Figure 4.8. Post support design validation analysis for support members.

Sheet metal was determined to be the most versatile and cost-effective option for unusual areas requiring support based on use within the industry. [47] While the solutions to this point in the design were still based on the experience of the designer rather than a wholly numerical approach, the process for identification of problems was powerful enough to take the initial design from concept to the final design represented in figure 4.11a where a skeleton frame was added to the top to simulate the resistance to torsional moment supplied by the refrigeration unit to be installed above the vehicle chassis. After verifying the design contained no other elements indicating stresses beyond acceptable bounds as seen in figure 4.11b, the design was presented to the board of investors to determine feasibility.

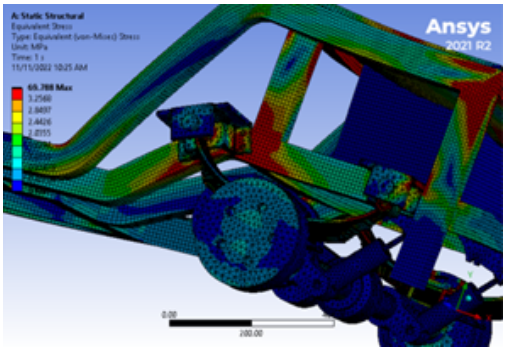

(a) Leaf spring mount stress contours.

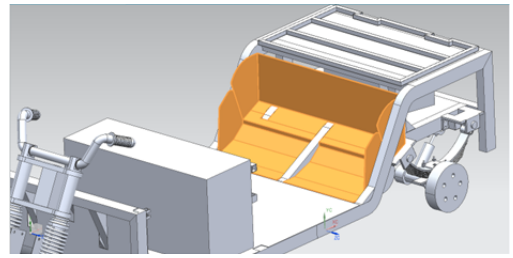

(b) Support sheet model.

Figure 4.9. Unacceptable stress values from axle mounting bracket and solution.

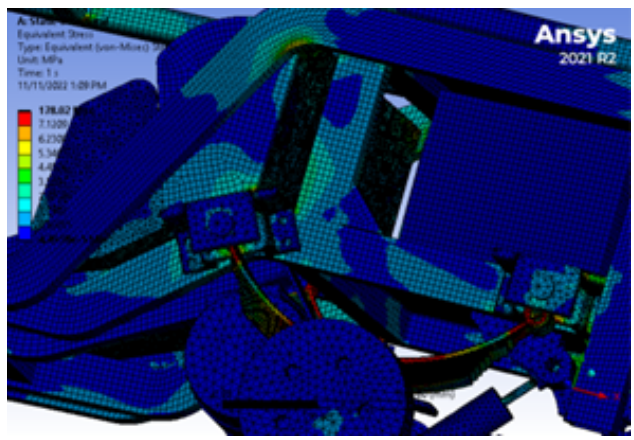

Figure 4.10. Post support design validation analysis on mounting bracket.

4.1.2 Design Change After Board Presentation

The board conferred and requested the design be updated nearly half a meter in every dimension to be functionally capable of carrying a power unit designed by another group within the company. The increase in both size and mass created torsional and static stresses that went beyond what a single motorcycle tire and suspension could resist, as well as adding a significant increase in cargo area, increasing the amount of transportable goods by nearly half a ton. The change from one front wheel to two would increase costs as the inexpensive single steering component would need to be replaced with both a steering axle, as well as a sourced steering column and related components, but the increased cost would result in far

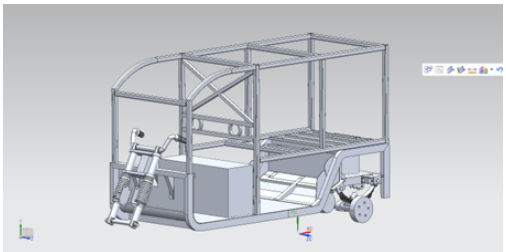

(a) Model.

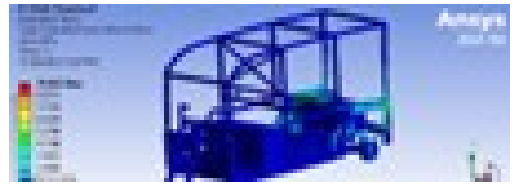

(b) Stress analysis.

Figure 4.11. Final three-wheeler design with torsional moment support.

greater stability on unpaved roads. The original axle could only drive a 1-ton load including the weight of the vehicle, so the increase in possible load went significantly beyond what the previously sourced components were capable of while still remaining within the scope of a micro bus.

To account for the new requirements, the new design needed to be capable of holding more power. Custom batteries for the project had already been designed by another group in the company, so the design shifted to include a battery box sandwiched in the center of the chassis that would act as both structural moment support as well as cargo support. Successful industry designs such as those by Bollinger and Tesla utilized a similar method of created room for batteries without sacrificing rigidity. [48][49]

4.2 Finite Element Analysis on Four-Wheeler Design

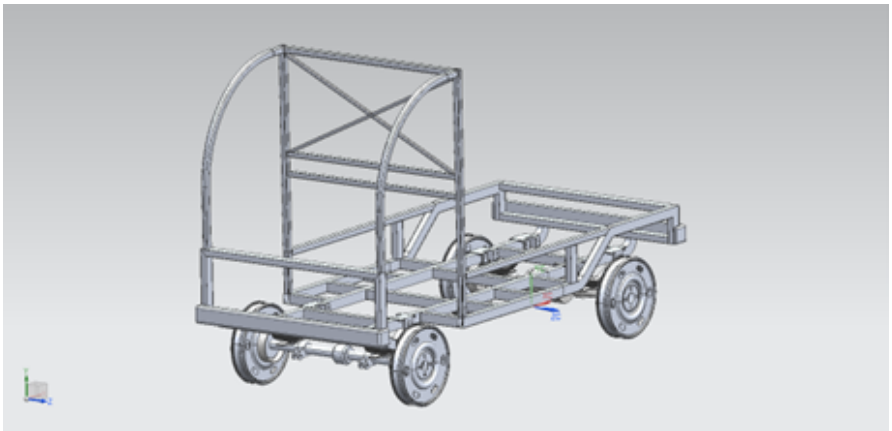

Figure 4.12. Initial design after conversion to four-wheeled design.

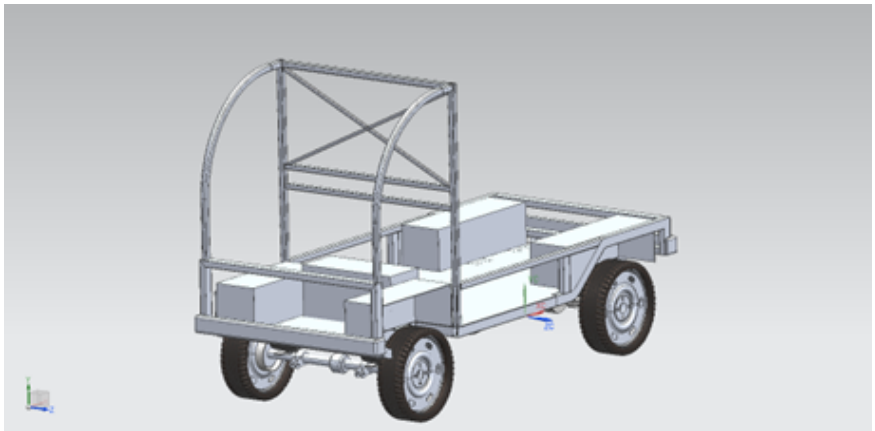

Figure 4.13. Four-wheeled design with bottom support sheet.

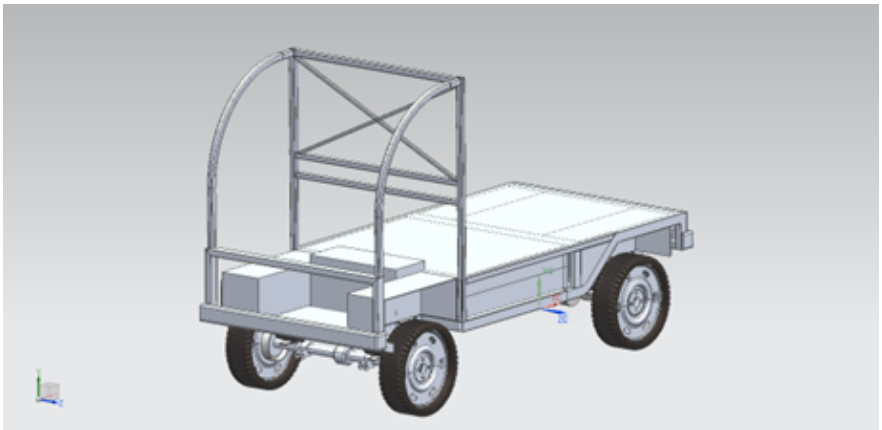

Figure 4.14. Four-wheeled design with top support sheet.

The concept model for the four wheeled design was checked using the same FEA approach as the three-wheeled one, being limited by the bounds of the initial design, so after completing the model to present to the board, design validation was performed using topology optimization. Topology optimization is a tool that aims to maximize the performance of a structure by optimizing its material layout. This means it's a tool that can approximate the optimal arrangement of structural support members for a given load and set of constraints. The solutions offered by the topology optimization tool aren't used as the guaranteed optimal solution to a structural problem, but as a useful guideline to improving a design.[50] Comparing this optimal layout to the current design would allow us to adjust the design in a direction that would reduce mass while maintaining structural rigidity completely separate from the FEA method.[51]

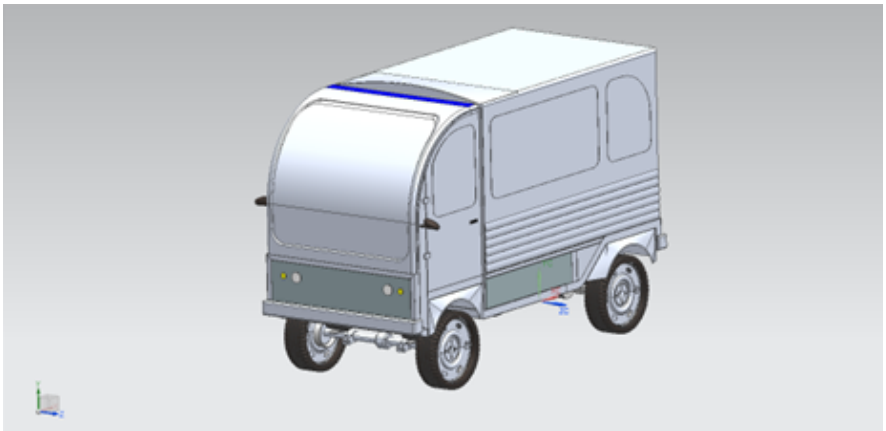

Figure 4.15. Concept model for complete design.

4.3 Four-Wheeler Design Verification through Topology Optimization Comparison

Topology optimization aims toward a separate objective from minimizing stress. The FEA method evaluates areas of high stress and seeks to minimize those stresses. The objective function of the topology optimization method seeks to minimize the weight of the model by varying the volume of mesh elements and checking the viability of the result using the design constraint of compliance. Compliance is a global measure of strain energy and is maximized by maximizing the first natural frequency of the model. The natural frequency is

a property that describes the frequency at which structures vibrate. Forced oscillations at an objects natural frequency are referred to as resonance.[52] Wang[53] showed the correlation between maximizing the first natural frequency and the stability of static structures, and the correlation can be seen using the equation.

$$f = (k \sphericalangle m) \sphericalangle 2 \tag{4.2}$$

where f is the frequency, k is the spring constant and m is the mass. Reducing the vibration in a structure leads to less fatigue and a more robust design. Topology does this by reducing as much mass as possible without reducing the stiffness of the structure as much as possible.

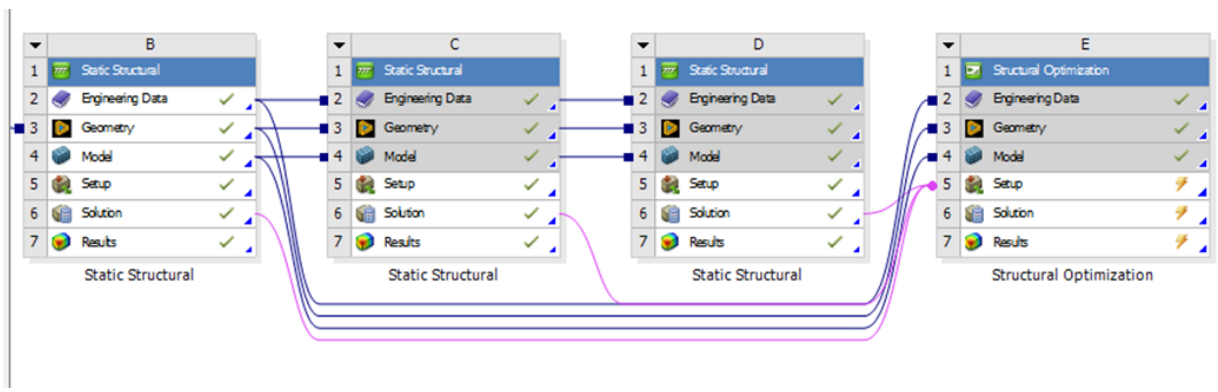

Figure 4.16. Topology optimization work flow .

Topology optimization takes deformation and stress information from a static analysis and uses it to determine maximum compliance of a structure by varying the volume of elements within the structure then analyzing the results within the static analysis against the driving compliance constraint before iterating the process until the solution converges on a solution that successfully reduces the volume of the model while also maintaining stiffness. The expression of the process can be written as:

$$minimize\ c\ f_{\mathrm{i}} u_{\mathrm{i}} \quad \mathrm{i} = 1, ndof \tag{4.3}$$

$$c_{\mathrm{i}} v_{\mathrm{i}} \leq V \quad \mathrm{i} = 1, nelem \tag{4.4}$$

$$K_{\mathrm{i}}\mathrm{j}(c) \cdot u_{\mathrm{j}}(c) = f_{\mathrm{i}} \quad \mathrm{i}, \mathrm{j} = 1, ndof \tag{4.5}$$

where f_{i} is the external load; u_{i} is the displacement due to the load; $ndof$ is the number of degrees of freedom; c_{i} is the design variable (volume fraction); v_{i} is the volume of the finite element i; $nelem$ is the number of finite elements; V is the total amount material that can be used to create the topology; K is the stiffness matrix of the structural system.[54]

For the design, both a series of single-load methods as well as a multi-load method were organized. In the case of topology optimization the loads function as constraints to the progression of the model so, in order to determine maximum effectiveness of the resultant model, the maximum global bending stiffness along the x and y axes, as well the maximum global torsional stiffness were taken into consideration.[55]

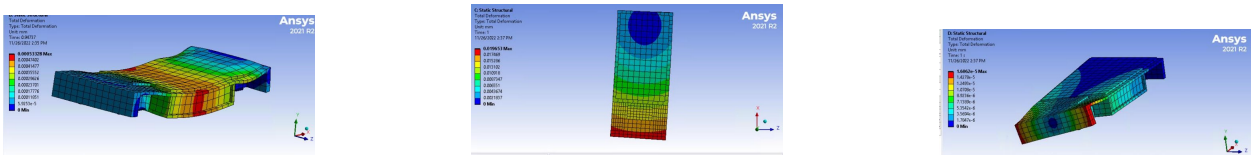

(a) Y axis bending. (b) X axis bending. (c) Torsional Bending.

Figure 4.17. Stiffness considerations for topology optimization.

Reload Volume Analysis	
Reload Volume Fraction	Off
Definition	
Maximum Number Of Iterat...	500.
Minimum Normalized Density	1.e-003
Convergence Accuracy	0.1 %
Initial Volume Fraction	Program Controlled
Penalty Factor (Stiffness)	3.
Region of Manufacturing Con...	Include Exclusions
Region of Min Member Size	Exclude Exclusions
Region of AM Overhang Cons...	Exclude Exclusions
Filter	Program Controlled

Figure 4.18. Topology optimization set up values.

Worksheet

Objective

Right click on the grid to add, modify and delete a row.

Enabled	Response Type	Goal	Criterion	Formulation	Environment Name	Weight	Multiple Sets	Start Step
☑	Compliance	Minimize	N/A	Program Controlled	Static Structural	1	Enabled	1
☑	Compliance	Minimize	N/A	Program Controlled	Static Structural 2	1	Enabled	1
☑	Compliance	Minimize	N/A	Program Controlled	Static Structural 3	1	Enabled	1

Figure 4.19. Topology Optimization Objectives.

The optimization process is set up with 500 maximum iterations to avoid run-times that are overlong with a minimum normalized density of 0.001 and convergence accuracy of 1%, which is good enough for our purposes of comparing valuable results. [56] The objective is to reduce mass, so the full objective is set to compliance for every load. The weight could be set to 2 for the y-axis bending load to account for expected cargo load, but is left at 1 to assess the success of the initial multi-load design. Finally, the optimization region, the region for interest in finding the optimal mass allocation for, as seen in figure 2.20

Figure 4.20. Optimization region.

is comprised of the structural frame surrounding the battery box and transferring the load from the top sheet of the model to the axle below. To set up the design space for mass removal, the simplest method is to ignore complex geometry and simply give the optimization software as much material as possible to work with. [55] As the design aside from the battery

box is flat, to do this three optimization models, one encompassing the entire design region, one with the center removed, and a flat model only comprising the bottom layer of the model were set up.

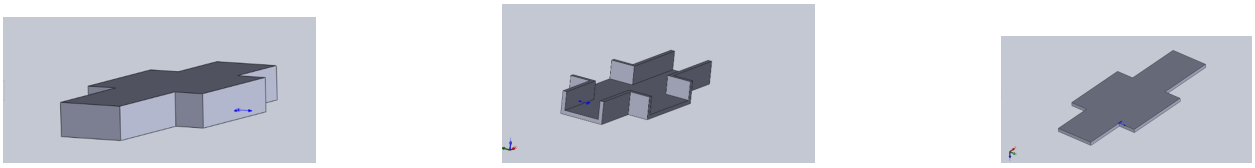

(a) Solid. (b) Shell. (c) Flat.

Figure 4.21. Input models for design optimization.

Initial optimization models only focused on a single load constraint. The y-axis load was chosen as the most significant load considering the effect of the cargo. The results of each optimization are shown in figure 2.22.

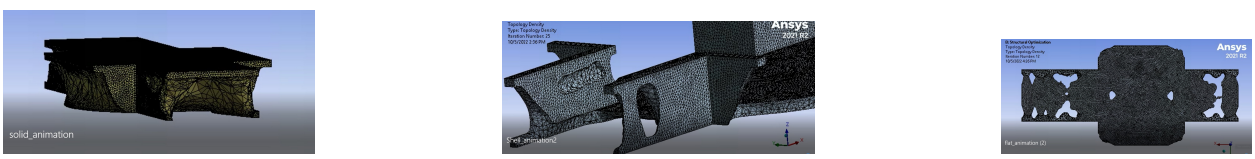

(a) Solid. (b) Shell. (c) Flat.

Figure 4.22. Input models for design optimization.

It would seem, at first glance, that the small models performed better at removing material organically than the solid model. This is the result of solutions tending to favor designs attached to the boundaries in a given set of circumstances using the level set method. [57] Because the boundary condition for the solid model encompassed the entirely of the top surface, the method disregarded the surface for material removal. The result is still useful as much of the remaining material would be replaced by the battery box and other 'exclusion regions' or areas that should not be included in the optimization. As all three gave valuable results with a single load, the multi-load optimization was attempted with the solid model.

The single load case was repeated using density, level set, and stress-based Evolutionary Structural Optimization or ESO optimization. The best results were given by density, and level set methods, with level set resulting in cleaner models while the density method afforded the option to scale the amount of material removed after optimization completed. For

the multi-load analysis, the level-set method was used. Level-set and density optimization methods are both SIMP (Solid Isotropic Micro structure with Penalization) methods that use continuous variable functions to isolate unnecessary elements by normalizing the 'stiffness' relation.[58] The benefit of the level set method is that it handles bodies with curvature without needing to parameterize, so generally completes optimization more quickly than density-based. [59]

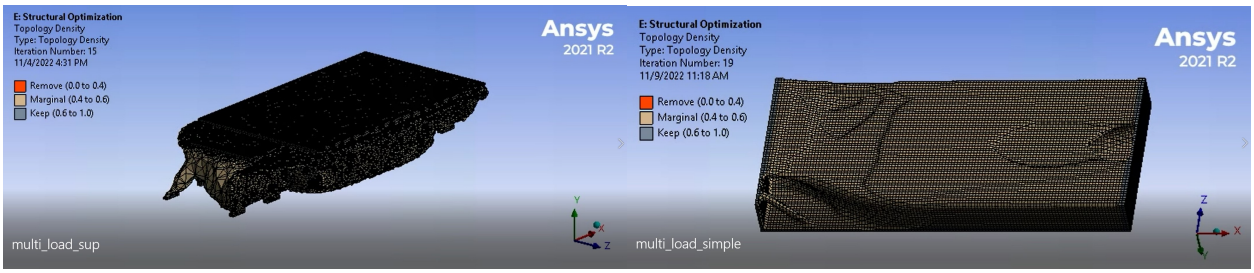

(a) Solid isometric view. (b) Solid bottom view.

Figure 4.23. Multi-load optimization of solid model.

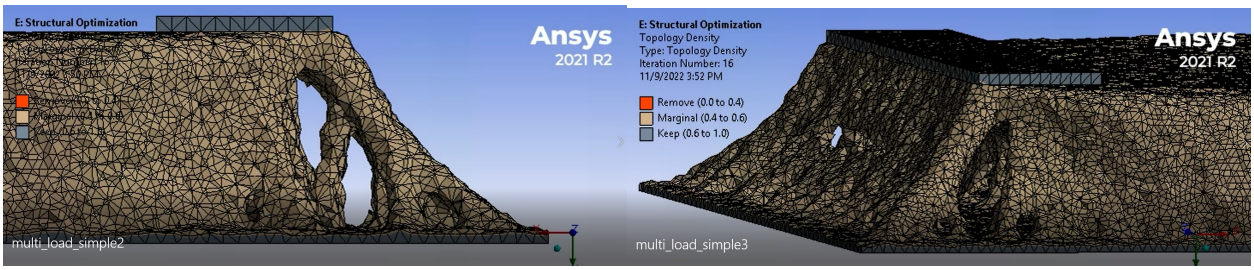

(a) Solid side view (inverted). (b) Solid close isometric view (inverted).

Figure 4.24. Solid multi-load close-up.

The solid model multi-load analysis gave a very similar result to the single load case with one significant difference. When accounting for all three load cases in one model, the optimization method failed to converge at any mass removal value below 78%. This meant that 1/5th of the total mass was still removable, but accounting for the exclusion regions where mass could not be taken away, there was a maximum removable mass of approximately 10%. The case was repeated using the shell model, which gave a usable model at y-axis load of 10000 N. A 10000N load was the expected load for the three wheel model, so when the

load was increased to expected load values for the four wheeler, the model failed to converge below 99% mass.

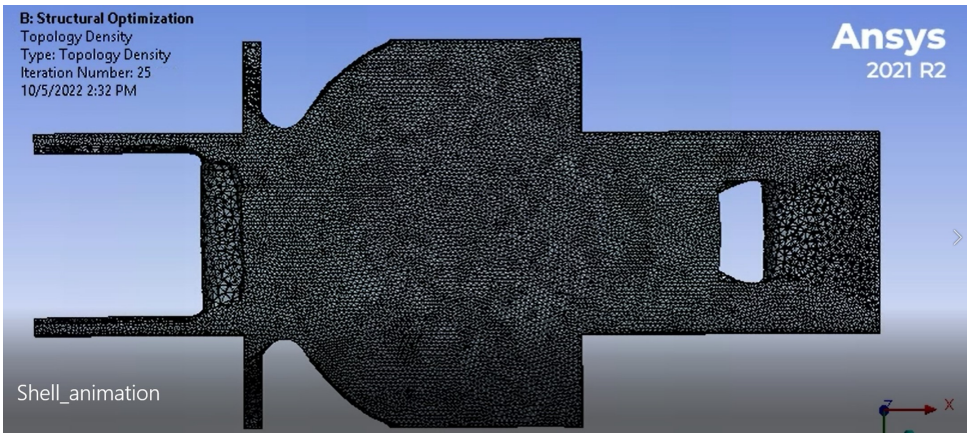

Figure 4.25. Shell multi-load result at low load.

This was repeated for the flat model, which failed to converge entirely, indicating that no material could be removed given the optimization conditions.

4.3.1 Optimization Results

Using a combination of the model in figure 2.25, and the model in 2.23 as a guide, a new model for the chassis structure was designed. Including exclusion regions of the battery box area and the driver, the new model had a total mass reduction of 4%. Based on similar work in the area[60][61] this is a significant volume, it does include exclusion zones, however, so may be smaller in actuality. The maximum stress in the model, when run through the same static analysis as the FEA method model, was approximately 32 MPa. Compared to the maximum stress from the FEA method of 30.6 MPa the optimization method successfully reduced the mass while keeping stresses comparable. Similarly, due to failing to remove a significant amount of mass when compared to the initial design, it shows the initial design was a viable arrangement of mass to satisfy the design constraints given.

4.3.2 Final Design Limitations and Reorientation

With the design validated structurally, it was taken to the lead engineer of a collaborating company to assess design costs against the project budget. The assessment result was that the design in steel alone was nearly double the project budget due mostly to the large dimension requirements of the project.

Rather than scrap the project, it was decided to create prototypes to provide proofs of concept for both the expected performance and cargo capacity of the design. If the prototypes demonstrated project objectives successfully, it would be possible to research methods to reduce manufacture costs down the line and bring the original model within budget. [62]

The first of these prototypes was based on the Norwegian Think car. The Think car was an electric smart car produced by the Norwegian company Think Nordic before they went out of business, and was similar in width to our designed model. So a plan was created to extend the length of the vehicle to demonstrate proposed function of a small electric SUV in the field in Ethiopia.

The second prototype referred to as the Honda conversion was to demonstrate the power of the electrical systems prepared for the four-wheeler model. Using an existing gasoline vehicle of similar dimensions and weight to our model, the prototype would demonstrate the electrical systems by taking the gasoline vehicle and replacing the gas related components with an electric motor and in-house designed battery box.

4.4 ThinkCar Physical Prototype for Capacity Testing

Structural steel was acquired and used to build an extension directly attached to the Think car frame. The frame was first aligned in the y and x axis directions with the front-to-back ceiling frame supports of the original vehicle frame and the main chassis that had been exposed.

The Think car side walls were mostly comprised of thin plastic with a skeleton frame similar to the torsional support approximation added to the three-wheel model. To extend the frame while keeping the back and front aligned, the vehicle exterior was cut in half and

(a) Steel Frame.

(b) Bumper fill.

Figure 4.26. Steel frame extension.

welded in horizontal and vertical supports in the gap to solidify the frame structure. The beams were welded directly to the car frame through the floor, and to the horizontal member running through the steel frame on top.

(a) Top Weld.

(b) Bottom Weld.

Figure 4.27. Torsional bending support structure for extension.

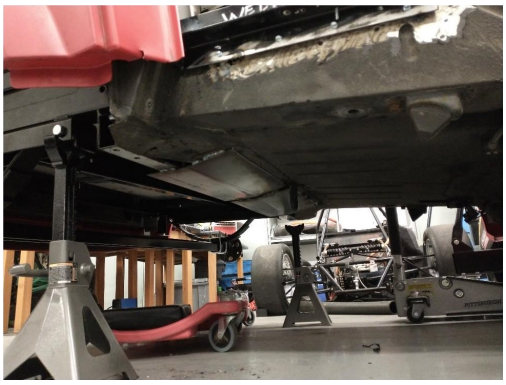

(a) Support plates.

(b) Horizontal bar.

Figure 4.28. Vertical bending support structure for extension.

Common wisdom [63] indicated the extension would perform better if the stiffness of the joint could be maximized. To do so, I conferred with the lead engineer at A&R Erectors and settled on two vital supports. The first, a horizontal beam that crossed the seam between the steel extension and the original car frame to resist any vertical bending in the -y axis, and to resist the opposite, two sheet metal plates welded across the bottom of the seam. These plates would perform better than another bar by dispersing some of the shock that would be transferred to the welds holding them. [64] An approximate model of the vehicle dimensions and weight alongside the new supports was designed and run through static analysis to verify it could support the weight of at least six people, the design constraint promised to foreign investors.

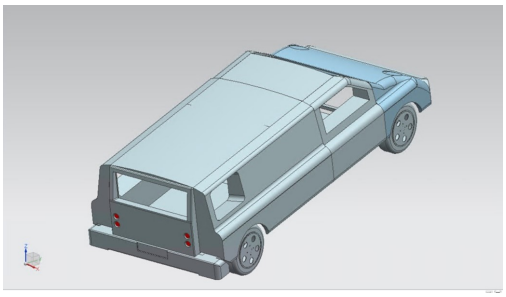

(a) Think Cad model.

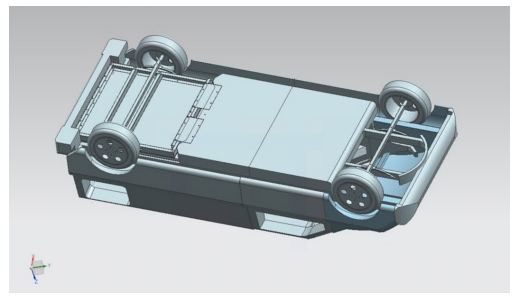

(b) Think Model Bottom.

Figure 4.29. Think Extension Model.

(a) External casing installed.

(b) Finished extension.

Figure 4.30. Think Prototype.

With the vehicle chassis extended, the rear axle also needed to be moved to account for the new center of mass of the vehicle. This meant removing the parking brake and brake lines from the rear axle. An adapter plate was designed and created to allow for electric calipers to be installed on the replacement rear axle should the prototype ever become more than a proof of concept and be driven on roads that require legal braking systems, but for current purposes the brakes were capped with high pressure plumbing caps and the braking system bled to verify the front brakes still functioned. Finally, the exterior casing was weather sealed on all windows and doors with silicone windshield sealant.

(a) Interior.

(b) Wiring for rear electric.

Figure 4.31. Think Prototype.

Finally, the wire harness leading to the electric systems of the rear door, turn indicators, brake lights and license light had to be cut, soldered and extended. The bundled harness was then hidden in a steel channel in the frame beneath a carpet insert cut for that purpose.

4.5 Honda Conversion Method

One of the original concepted methods for creating a micro-bus was to convert an Isuzu truck from gasoline to electric. The second prototype seeks to achieve a similar goal. At the time of writing this report, the Honda prototype is still in its initial stages. The plan is to remove all the unnecessary components to an electric vehicle. This includes the radiator, fuel lines, engine, air filter, exhaust lines, oil and gas tank, and so on. The bulk of the research required to begin the prototype involved measuring the dimensions of the engine compartment, locations of frame structures on the underside of the vehicle and preparing a model for conversion design.

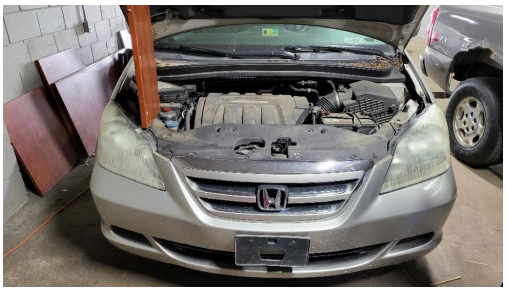

(a) Honda engine compartment.

(b) Measurement example.

Figure 4.32. Engine dimensioning for modeling.

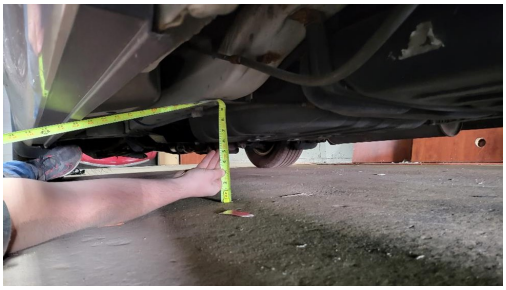

(a) Honda frame height.

(b) Oil tank and Fuel tank for removal.

Figure 4.33. Frame dimensioning for battery box modeling.

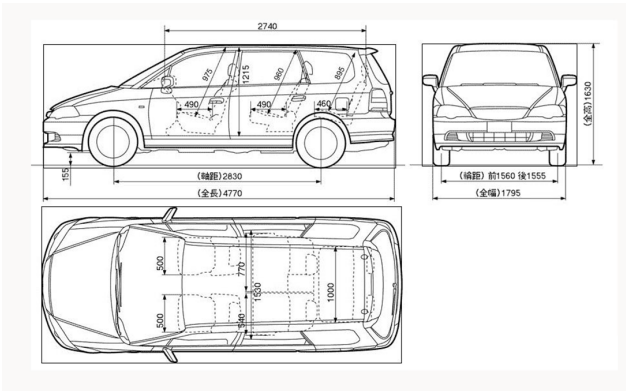

(a) Honda reference images.

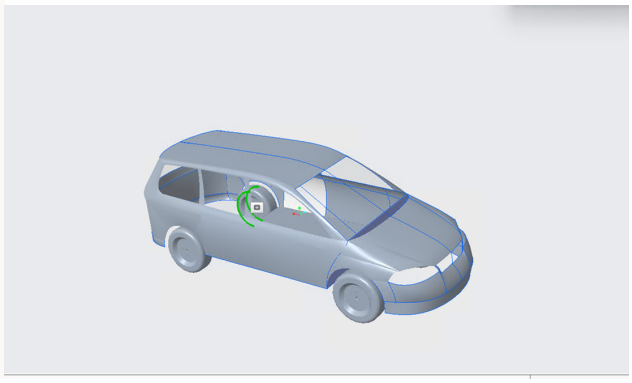

(b) Honda preliminary model.

Figure 4.34. Starting stages of honda model.

Using the model of the vehicle and available space both beneath and within the engine compartment, research can be done to determine the maximum size engine and number of battery cells that can fit in the vehicle. From there we plan to design an engine mount and a transmission adapter to make use of the vehicles existing transmission as well as battery boxes to manufacture and install on the prototype.

5. SUMMARY

5.1 Research Objectives

The primary objectives of this research were to create a chassis design that could be manufactured in Ethiopia as an accessible alternative to pack animals that would help to increase yield of tradable produce. The final, four-wheeled design successfully met the constraints of weight compliance and structural strength. The design failed to remain within the manufacturable budget set for the project, but remains a well-tested solution if manufacturing costs can be reduced.

To that end, the Think prototype has been completed to operate in Ethiopia as a proof of concept of cargo or passenger capacity of the intended design, and can field test the viability of electrical vehicles in the areas of interest. A second prototype, the Honda, is in the process of being created for the purposes of proving the capability of the electrical systems for a high weight vehicle, while simultaneously facilitating the development of a gasoline to electric conversion kit and process for future development.

5.1.1 Recommendations

The success of the four-wheeled design suggests it would be a strong candidate for further research should the Think and Honda prototypes be successful in their intended fields. The modular nature of the design would allow it to be marketed for purposes beyond crop transport as transportation though areas with poor infrastructure has multiple applications.

Further improvement of the design could lie within narrowing the design domain of the topology optimization to focus on areas such as the bracket mounts and is worth investigation.

Weight was the primary focus for this research in order to produce feasible designs, but there are other possible parameters and methods to creating an improved design. Parameters such as wall thickness and material properties can be analyzed via optimization method to possibly determine a far more optimal vehicle weight and production cost.

REFERENCES

[1] T. Alemu and A. Mengistu, *Impacts of climate change on food security in ethiopia: Adaptation and mitigation options: A review.* C. Springer, Ed., Climate Change-Resilient Agriculture and Agroforestry., 2019. [Online]. Available: https://doi.org/10.1007/978-3-319-75004-0_23.

[2] J. Bloem. "Food insecurity in africa spiked early in covid-19 pandemic, with limited recovery a year later." version 1.5. (Nov. 23, 2022), [Online]. Available: https://www.ers.usda.gov/data-products/chart-gallery/gallery/chart-detail/?chartId=104625.

[3] W. B. Group. "Ethiopia." version 1. (2021), [Online]. Available: https://data.worldbank.org/country/ethiopia?view=chart.

[4] G. Y. Wendimu, "The challenges and prospects of ethiopian agriculture," *Cogent Food & Agriculture*, 2021.

[5] P. Gautam, R. Lisinge, G. S. Tulu, Y. Bekele, T. Abegaz, and T. Gelete, "Road safety performance review ethiopia," *Geneva 2020*, 2020.

[6] A. Wudad, S. Naser, and L. Lameso, "The impact of improved road networks on marketing of vegetables and households' income in dedo district, oromia regional state, ethiopia," *Heliyon*, 2021.

[7] A. Wudad, S. Naser, and L. Lameso, "The impact of improved road networks on marketing of vegetables and households' income in dedo district, oromia regional state, ethiopia.," *Heliyon*, vol. 7, 10 2021. DOI: https://www.sciencedirect.com/science/article/pii/S2405844021022763.

[8] OEC. "Refined petroleum in ethiopia." version 1. (2020), [Online]. Available: https://oec.world/en/profile/bilateral-product/refined-petroleum/reporter/eth.

[9] A. Ababa. "Ethiopia exempts electric vehicles from taxes to drive down prices, encourage local assembly." version 1. (2022), [Online]. Available: https://ethiopianmonitor.com/2022/09/16/ethiopia-exempts-electric-vehicles-from-taxes-to-drive-down-prices-encourage-local-assembly/.

[10] T. Kawakami, Y. Muramatsu, and S. Shirai. "China led world with 500,000 electric car exports in 2021." version 1. (2022), [Online]. Available: https://asia.nikkei.com/Spotlight/Electric-cars-in-China/China-led-world-with-500-000-electric-car-exports-in-2021#:~:text=According%5C%20to%5C%20Nikkei%5C%20research%5C%20based,Japan%5C%20accounted%5C%20for%5C%20just%5C%200.9%5C%25..

[11] B. Truck and A. Group. "Truck classification explained." version 1. (2022), [Online]. Available: badgertruck.com/heavy-truck-information/truck-classification/.

[12] E. Kebede, "Grain legumes production and productivity in ethiopian smallholder agricultural system, contribution to livelihoods and the way forward," *Cogent Food & Agriculture*, 2020.

[13] G. Steucek. "A lifetime of learning to produce premium dry beans." version 1. (2019), [Online]. Available: https://www.lancasterfarming.com/country-life/food-and-recipes/a-lifetime-of-learning-to-produce-premium-dry-beans/article_17eb5418-a4da-58e1-87d6-875b45ac394d.html#:~:text=As%5C%20for%5C%20the%5C%20yields%5C%2C%5C%20Baer,types%5C%20we%5C%20grow%5C%20do%5C%20not.%5C%E2%5C%80%5C%9D.

[14] P. jones. "Mini trucks weight & dimensions: 7 examples to know." version 1. (2019), [Online]. Available: https://motorandwheels.com/mini-trucks-weight-dimensions/.

[15] G. Steucek. "Hyundai launches first electric minibus with 128kwh battery pack." version 1. (2020), [Online]. Available: https://electrek.co/2020/06/30/hyundai-electric-minibus-128-kwh-battery-pack/.

[16] Y. Kamiya, K. Sato, and Y. Daisho, "Evaluation of environmental-friendliness of waseda advanced electric micro bus," *World Electric Vehicle Journal*, 2010.

[17] S. Nandhakumar, S. Seenivasan, A. M. Saalih, and M. Saifudheen, "Weight optimization and structural analysis of an electric bus chassis frame," *Materials Today: Proceedings*, 2020.

[18] allaboutethio. "7 best & most popular cars/trucks/mini-buses to buy & sell in ethiopia." version 1. (2022), [Online]. Available: https://allaboutethio.com/7-best-most-popular-cars-trucks-minibus-in-ethiopia.html.

[19] toyota. "Toyota hiace specifications." version 1. (2022), [Online]. Available: https://toyota.dreamhosters.com/pages/hiace/specs.php.

[20] H. M. Kassaw, Z. Birhane, and G. Alemayehu, "Determinants of market outlet choice decision of tomato producers in fogera woreda, south gonder zone, ethiopia," *Cogent Food and Agriculture*, 2019.

[21] T. Mengesha, "Emancipating the rural population from isolation intermediate means of transport (imts) the case of ethiopia in sub-saharan africa," *AFCAP Practitioners Conference*, 2010.

[22] E. Igunza. "Why are cars so expensive in ethiopia?" Version 1. (2017), [Online]. Available: https://www.bbc.com/news/world-africa-38607986.

[23] S. Moaveni, *Finite Element Analysis Theory and Application with ANSYS, Fourth Edition*. Pearson, ISBN: 978-0-273-77430-3.

[24] E. L. Wachspress, *Finite element method*, Jan. 1, 2003. [Online]. Available: https://dl.acm.org/doi/pdf/10.5555/1074100.1074400.

[25] I. Gadagottu and M. V. Mallikarjun. "Structural analysis of heavy vehicle chassis using honey comb structure." version 1. (2015), [Online]. Available: http://www.ijmerr.com/v4n1/ijmerr_v4n1_18.pdf.

[26] E. Toolbox. "Steels - endurance limits and fatigue stress." version 1. (2022), [Online]. Available: https://www.engineeringtoolbox.com/steel-endurance-limit-d_1781.html.

[27] nuclearpower.net. "Mild steel density strength hardness melting point." version 1. (2022), [Online]. Available: https://material-properties.org/mild-steel-density-strength-hardness-melting-point/.

[28] S. Benzley, E. Perry, and K. Merkley, "A comparison of all hexagonal and all tetrahedral finite element meshes for elastic and elasto-plastic analysis," *Academia*, vol. 4, Proceedings 1995. DOI: https://d1wqtxts1xzle7.cloudfront.net/41214552/A_Comparison_of_All_Hexagonal_and_All_Te20160113-1758-vz481h.pdf20160115-19908-86t2hz-with-cover-page-v2.pdf?Expires=1669258646&Signature=T95r1h-v1-virDOpnmbsIepE0P97GDaZg0IXsVnSOmcl3D-yI7qGBue2~1bVYMpKRjkWxe4xPfGkddWUk8WWSAxlctiAK-KGhSmdDVQrljPTlp9jMhoRgCRxGH7T9GkeuTqQoPhVydFy9OatyMQhQePcxK7L~rd5WIQQJ51c~YpCoCH7l7zEidVHDDO6a0DiFeQfPdMknJpapgB8PPpa78SfNBWJE0L~3hOqKHlhHR2IFaErcxsStH010OT~kSrsTjTbvQ2rDnZT3Xqb043MRBPX~uDolEC4kfRUasw1HpHVCjvnrLdAG-hJvDJlHu~zxE8phDmIpk43Yxn8G7r3YQ__&Key-Pair-Id=APKAJLOHF5GGSLRBV4ZA.

[29] C. CFD. "Hexahedral mesh vs. tetrahedral: Comparing high-quality meshing." version 1. (2022), [Online]. Available: https://resources.system-analysis.cadence.com/blog/msa2022-hexahedral-mesh-vs-tetrahedral-comparing-high-quality-meshing.

[30] S. Engineering. "Jacobian in fea." version 1. (2021), [Online]. Available: https://structuralengineering.softecks.in/.

[31] K. PM, *Finite Element Analysis and Design*. Elsevier, 2003, ISBN: 978-81-7764-522-4.

[32] P. A. LeGresley and J. J. Alonso. "Airfoil design optimization using reduced order models based on proper orthogonal decomposition." version 1. (2000), [Online]. Available: http://aero-comlab.stanford.edu/Papers/legresley.aiaa.00-2545.pdf.

[33] A. Chatterjee, "An introduction to the proper orthogonal decomposition," *Current Science*, vol. 78, 7 2000. DOI: https://www.jstor.org/stable/24103957.

[34] Wa Kwok and Zhijian Chen, *A simple and effective mesh quality metric for hexahedral and wedge elements*, 2000. [Online]. Available: https://www.researchgate.net/publication/2433455_A_Simple_And_Effective_Mesh_Quality_Metric_For_Hexahedral_And_Wedge_Elements.

[35] I. Ansys. "6.2.2 mesh quality." version 12. (2009), [Online]. Available: https://www.afs.enea.it/project/neptunius/docs/fluent/html/ug/node167.htm#:~:text=Skewness%5C%20is%5C%20defined%5C%20as%5C%20the,accuracy%5C%20and%5C%20destabilize%5C%20the%5C%20solution.

[36] U.S.C., "Title 47 weights and measures," Nov. 12, 2018. [Online]. Available: http://webserver.rilin.state.ri.us/Statutes/TITLE47/47-4/47-4-2.HTM#:~:text=(1)%5C%20A%5C%20bushel%5C%20of%5C%20apples,pounds%5C%20(40%5C%20lbs.)..

[37] M. B. Patil and P. S. Kelkar, "Finite element analysis and natural frequency optimization of engine mounting bracket," *International Journal of Mechanical and Industrial Engineering*, 2012.

[38] J. K.Guest and J. H.Prévost, "Optimizing multifunctional materials: Design of microstructures for maximized stiffness and fluid permeability," Nov. 10, 2006. [Online]. Available: https://www.sciencedirect.com/science/article/pii/S0020768306000631.

[39] D. M. Potts and L. Zdravkovic, *Finite element analysis in geotechnical engineering*. Thomas Telford Publishing, 1999, ISBN: 0-7277-2753-2.

[40] M. Szulc, I. Malujda, and K. Talaka, "Method of determination of safety factor on example of selected structure," *Procedia Engineering*, 2015. [Online]. Available: https://www.sciencedirect.com/science/article/pii/S0020768306000631.

[41] V. Neelakandan, A. Jha, S. R. P. V, and J. Hardikar, "Importance of fatigue life in design optimisation of off-highway powershift transmission system," *Journal of Materials Science and Surface Engineering*, 2015.

[42] D. Yang, Z. Yu, L. Zhang, and W. Cheng, "Modal analysis of automobile brake drum based on ansys workbench," *Advances in Computer Science Research*, 2017.

[43] G. Babukanth and M. V. Teja, "Transient analysis of disk brake by using ansys software," *International Journal of Mechanical and Industrial Engineering*, 2012.

[44] S. Tao, B. Chen, and X.-J. Fan, "Structural fatigue life prediction based on ansys random vibration analysis," *Advances in Engineering Research*, 2016.

[45] F. Alkhatib, "Techniques for engine mount modeling and optimization," *Theses and Dissertations*, 2013. [Online]. Available: https://dc.uwm.edu/cgi/viewcontent.cgi?article=1349&context=etd.

[46] R. Direct. "Cnc machining cost calculation: All factors and tips you must know." version 1. (2022), [Online]. Available: https://www.rapiddirect.com/blog/cnc-machining-cost-calculation/.

[47] Z. T. Abdullah, "Assessment of end-of-life vehicle recycling: Remanufacturing waste sheet steel into mesh sheet," Nov. 7, 2021. [Online]. Available: https://doi.org/10.1371/journal.pone.0261079.

[48] G. H. Ruffo. "Tesla cybertruck engineering analysis explains exoskeletons edges." version 1. (2019), [Online]. Available: https://insideevs.com/news/397899/tesla-cybertruck-analysis-explains-exoskeleton/.

[49] B. Halvorson. "Bollinger motors teases commercial potential of its electric truck chassis." version 1. (2020), [Online]. Available: https://www.greencarreports.com/news/1127425_bollinger-motors-teases-commercial-potential-of-its-electric-truck-chassis.

[50] S. Ramesh, R. Handal, and M. J. Jensen, "Topology optimization and finite element analysis of a jet dragster engine mount," *Cogent Engineering*, 2020.

[51] Z.-L. Zhao, S. Zhou, K. Cai, and Y. M. Xie, "A direct approach to controlling the topology in structural optimization," *Computers and Structures*, 2019.

[52] C. J. Clark1, D. O. Elias, M. B. Girard, and R. O. Prum, "Structural resonance and mode of flutter of hummingbird tail feathers," *The Journal of Experimental Biology*, 2013.

[53] D. Wanga, M. Friswellb, and Y. Lei, "Maximizing the natural frequency of a beam with an intermediate elastic support," *Journal of Sound and Vibration*, 2006.

[54] C. A. Soto, "Structural topology optimization: From minimizing compliance to maximizing energy absorption," *Int. J. Vehicle Design*, 2001.

[55] M. Cavazzuti, A. Baldini, E. Bertocchi, D. Costi, E. Torricelli, and P. Moruzzi, "High performance automotive chassis design:a topology optimization based approach," *Structural and Multidisciplinary Optimization*, 2011. DOI: 10.1007/s00158-010-0578-7.

[56] L. Xue-ping, Z. Lian-yu, and L. Zheng-zhong, "Topological optimization of continuum structure based on ansys," *MATEC conferences*, 2017.

[57] H. E. Jr. and E. A. Fancello, "Topology optimization with local stress constraint based on level set evolution via reactiondiffusion," *Computer Methods in Applied Mechanics and Engineering*, 2016.

[58] G. I. N. Rozvany, "A critical review of established methods of structural topology optimization," *Structure Multidisc Optimization*, 2007.

[59] D. Enright, R. Fedkiw, J. Ferziger, and I. Mitchell, "A hybrid particle level set method for improved interface capturing," *Scientific Computing - Computational Mathematics Program*, 2002.

[60] A. Merulla, A. Gatto, E. Bassoli, *et al.*, "Weight reduction by topology optimization of an engine subframe mount, designed for additive manufacturing production," *Science Direct*, 2019.

[61] V. Neelakandana, T. Ganesanb, and P. C. Rao, "Weight optimization of housing bracket for electrical starter motor using fea," *Procedia Structural Integrity*, 2019.

[62] R. Liu, X. Li, and S. Chen, "Extension analysis of manufacturing cost and construction of basic-elements model," *Procedia Computer Science*, 2019.

[63] M. Ferrara. "A stiffer chassis? vehicle torsional rigidity explained." version 1. (2015), [Online]. Available: https://dsportmag.com/the-tech/chassis-tuning-torsional-rigidity/.

[64] F. Mancini, H. Remes, J. Romanoff, and P. Gallo, "Influence of weld rigidity on the non-linear structural response of beams with a curved distortion," *Engineering Structures*, 2021.